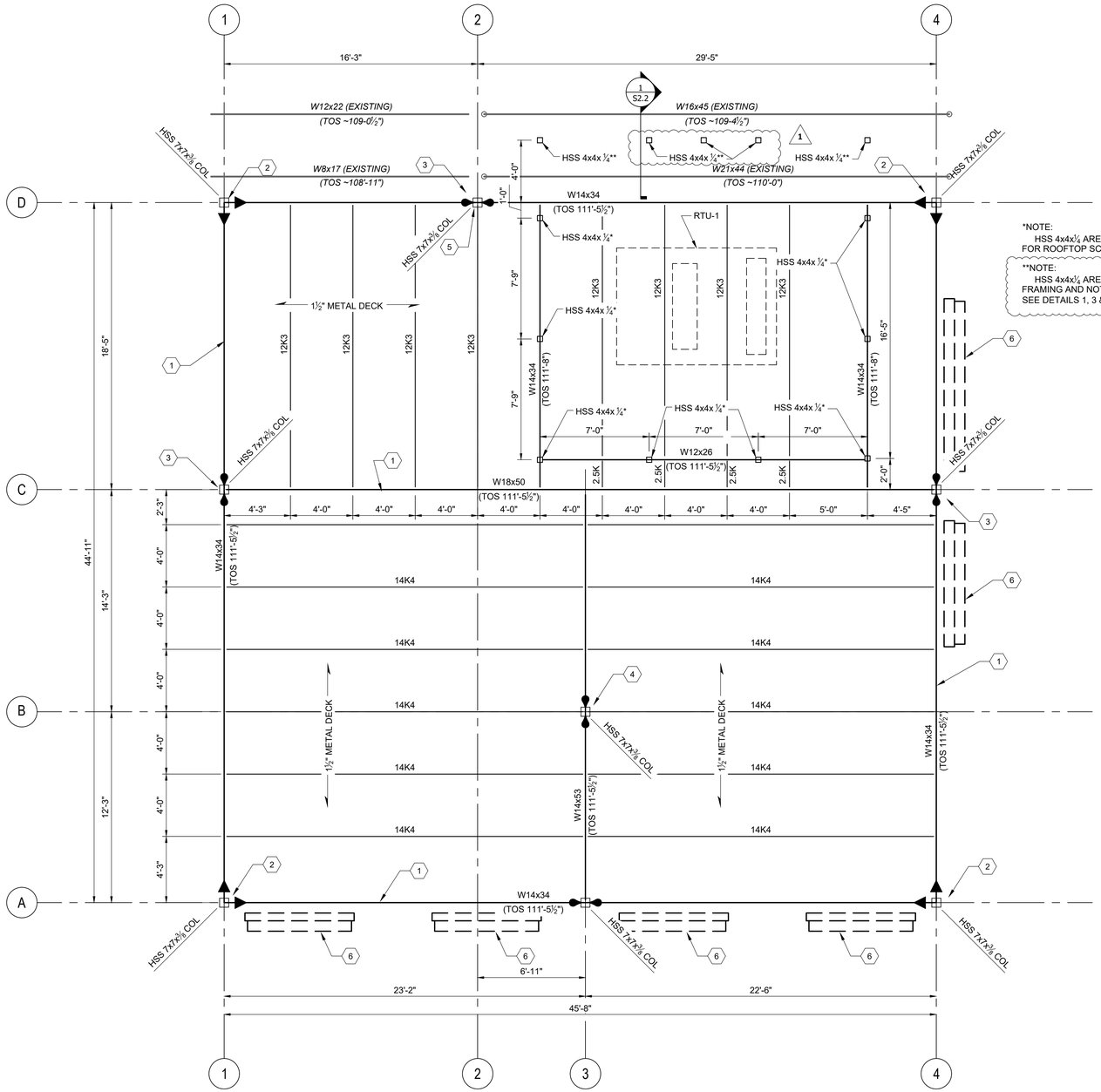

*NOTE:
HSS 4x4x¼ ARE POSTS CONNECTED TO TOP OF BEAMS FOR ROOFTOP SCREEN, SEE DETAIL 1 ON SHEET S2.3.

**NOTE:
HSS 4x4x¼ ARE END POSTS INTEGRAL WITH SCREEN FRAMING AND NOT SUPPORTED BY THE EXISTING ROOF, SEE DETAILS 1, 3 & 5ON SHEET S2.3

NOTES (THIS SHEET)

1. REFER TO SHEETS S0.1 & S0.2 FOR GENERAL NOTES, LEGEND, AND ABBREVIATIONS.
2. SEE SHEET S4.2 FOR TYPICAL STRUCTURAL DETAILS RELATED TO STRUCTURAL STEEL FRAMING AND STEEL JOISTS.

KEYNOTES (THIS SHEET)

1. HSS 2½ x 2½ x ⅛ TO BE WELDED ON TOP OF BEAM FOR METAL DECK SUPPORT. SEE DETAIL 5 ON SHEET S2.2.
2. CORNER COLUMN MOMENT CONNECTION, SEE DETAIL 2 ON SHEET S2.2.
3. W14x34 BEAM OVER COLUMN, SEE DETAIL 3 ON SHEET S2.2.
4. W14x53 BEAM OVER COLUMN, SEE DETAIL 4 ON SHEET S2.2.
5. EXTEND BOTTOM CHORD OF JOIST TO FIT AROUND BEARING STIFFENER. SEE DETAIL 6 ON S2.2.
6. HSS HEADER WITH ANGLE BRICK LINTEL, SEE DETAIL 7 ON S2.2 AND DETAILS ON S4.3.

▶ SYMBOL INDICATES MOMENT CONNECTION. SEE DETAILS 2 S2.2.

SYMBOL INDICATES BEAM IS CONTINUOUS OVER TOP OF COLUMN. SEE DETAILS 3 AND 4 ON SHEET S2.2.

1 ROOF FRAMING

0 1' 2' 4' 8'

SCALE 1/4" = 1'

fgma

FGM Architects Inc.
1211 W 22nd St, Suite 700
Oak Brook, Illinois 60523

630.574.8300 OFFICE
630.574.7070 FAX

ILLINOIS PROFESSIONAL DESIGN FIRM #184-000350

STRUCTURAL
CLARK DIETZ
118 S CLINTON, SUITE 700
CHICAGO, IL 60661
312.466.8242 (O)
DESIGN FIRM REGISTRATION NO. 184-000450

M.E.P.
CLARK DIETZ
118 S CLINTON, SUITE 700
CHICAGO, IL 60661
312.466.8242 (O)
DESIGN FIRM REGISTRATION NO. 184-000450

CIVIL
CLARK DIETZ
118 S CLINTON, SUITE 700
CHICAGO, IL 60661
312.466.8242 (O)
DESIGN FIRM REGISTRATION NO. 184-000450

NOT FOR CONSTRUCTION

FOR REVIEW ONLY

Not for regulatory approval, permit or construction.

The information on this document is preliminary or incomplete, not for construction, recording purposes, or implementation.

ISSUANCE

NO	DATE	DESCRIPTION
1	12-11-2024	ADDENDUM

LAKE COUNTY PUBLIC WORKS OFFICE ADDITION

LAKE COUNTY, IL
650 WEST WINCHESTER ROAD,
LIBERTYVILLE, IL 60048

95% CD ISSUANCE

ROOF FRAMING PLAN

SHEET NO.

S1.2

JOB NO. 24-4020.01

© 2024 FGM Architects Inc.

Copyright 2024 FGM ARCHITECTS, INC.

NOTES (THIS SHEET)

1. REFER TO SHEETS S0.1 & S0.2 FOR GENERAL NOTES, LEGEND, AND ABBREVIATIONS.
2. NORTH-SOUTH SECTIONS SHALL BE COMPLETE SHOP FABRICATED ASSEMBLIES OF POSTS AND RAILS. EAST-WEST SECTION IS INTENDED FOR FIELD FABRICATION WITH FIELD WELDING OF BOTTOM AND TOP RAILS TO POSTS.
3. ALL ROOF SCREEN FRAMING SHALL BE HOT-DIP GALVANIZED. PROVIDE VENT HOLES AT UNDERSIDE OF HORIZONTAL MEMBERS.
4. AFTER ERECTION CLEAN DRESS WELD AREAS AND PAINT CONNECTION AREAS WITH (3) COATS OF GALVANIZING PAINT.
5. SEE ARCHITECTURAL SHEETS FOR ADDITIONAL DETAILS.

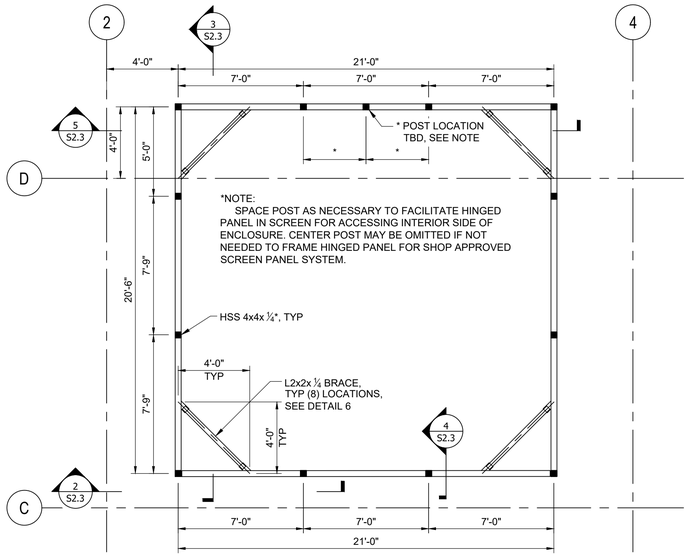

1 ROOF SCREEN FRAMING PLAN

0 1' 2' 4'

SCALE 1/2" = 1'

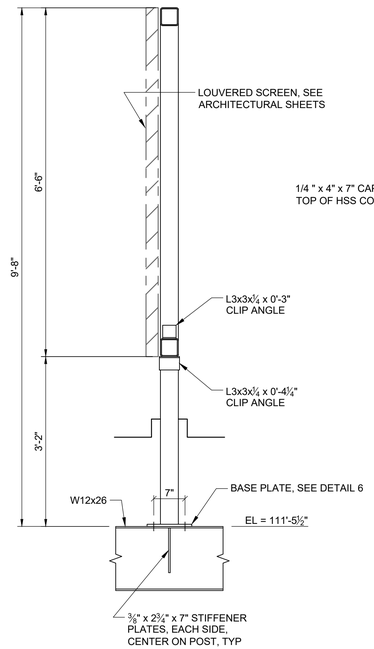

4 SECTION

0 1' 2' 3'

SCALE 3/4" = 1'

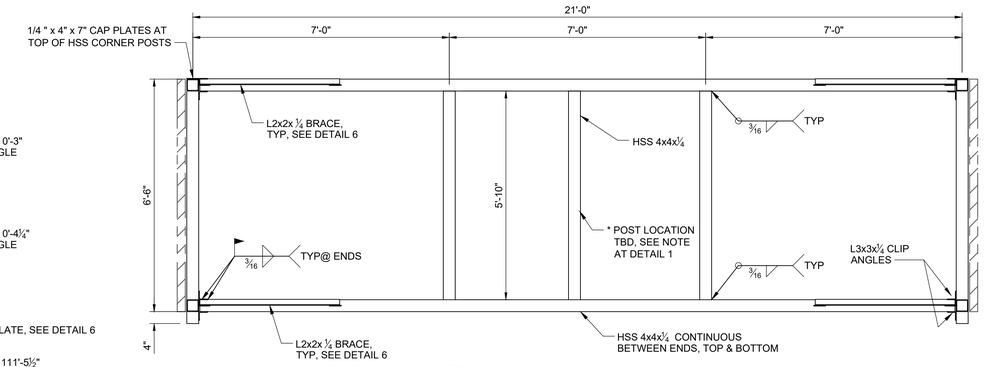

5 SECTION

0 1' 2' 4'

SCALE 1/2" = 1'

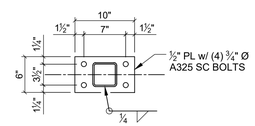

6 BASE PLATE DETAIL

NOT TO SCALE

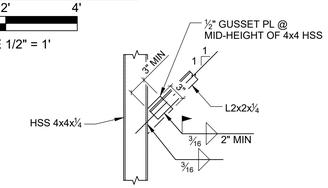

7 BRACE DETAIL

NOT TO SCALE

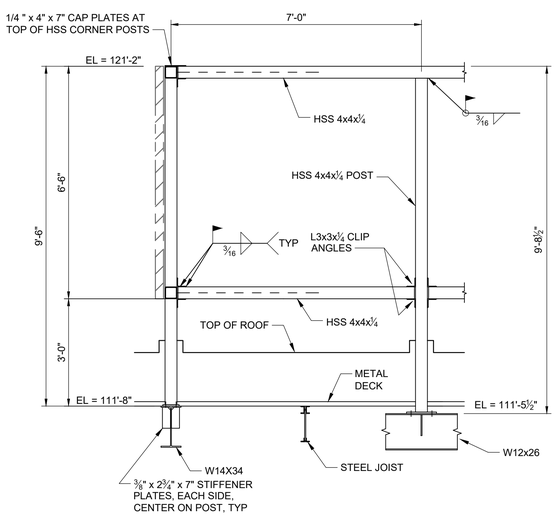

2 SECTION

0 1' 2' 4'

SCALE 1/2" = 1'

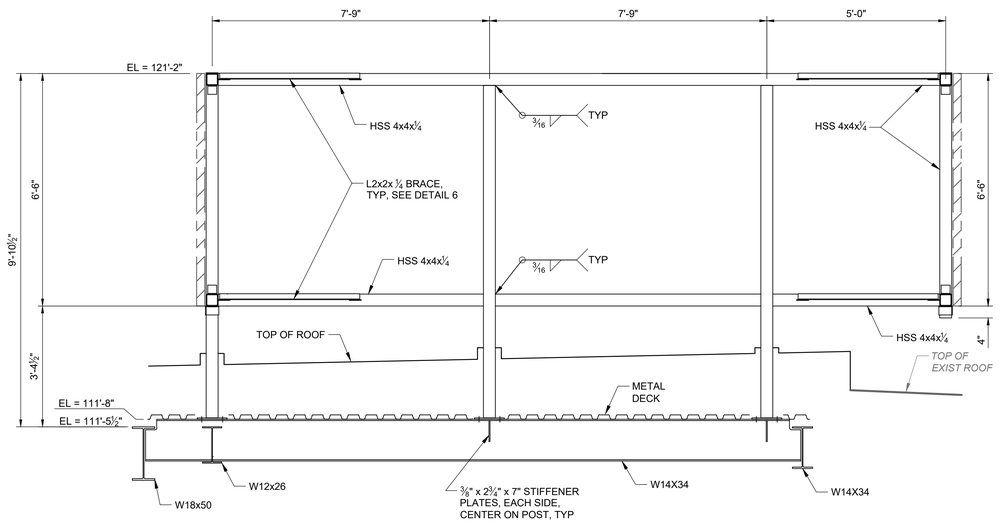

3 SECTION

0 1' 2' 4'

SCALE 1/2" = 1'

fgma

FGM Architects Inc.
1211 W 22nd St, Suite 700
Oak Brook, Illinois 60523

630.574.8300 OFFICE
630.574.7070 FAX

ILLINOIS PROFESSIONAL DESIGN
FIRM #184-000350

STRUCTURAL
CLARK DIETZ
118 S CLINTON, SUITE 700
CHICAGO, IL 60661
312.466.8242 (O)
DESIGN FIRM REGISTRATION
NO. 184-000450

M.E.P.
CLARK DIETZ
118 S CLINTON, SUITE 700
CHICAGO, IL 60661
312.466.8242 (O)
DESIGN FIRM REGISTRATION
NO. 184-000450

CIVIL
CLARK DIETZ
118 S CLINTON, SUITE 700
CHICAGO, IL 60661
312.466.8242 (O)
DESIGN FIRM REGISTRATION
NO. 184-000450

NOT FOR CONSTRUCTION

FOR REVIEW ONLY

Not for regulatory approval, permit or construction.

The information on this document is preliminary or incomplete, not for construction, recording purposes, or implementation.

ISSUANCE		
NO	DATE	DESCRIPTION
1	12-11-2024	ADDENDUM -SHEET REPLACED

LAKE COUNTY PUBLIC WORKS OFFICE ADDITION

LAKE COUNTY, IL
650 WEST WINCHESTER ROAD,
LIBERTYVILLE, IL 60048

95% CD ISSUANCE

FRAMING SCREEN DETAILS

SHEET NO. **S2.3**

JOB NO. 24-4020.01

© 2024 FGM Architects Inc.

Copyright 2024 FGM ARCHITECTS, INC.